SMALL FRICTION AND LARGE LOAD

JRZC®

瓦房店金锐轴承制造有限公司

WAFANGDIAN JINRUI BEARING MANUFACTURING CO., LTD.

总部地址: 大连市瓦房店祝华工业园区

生产地址: 山东省临清市唐园镇工业区

INTERNATIONAL BRANCH: CHANG ZHOU NAYI BEARING CO.,LTD

+86-635-2813786

+86-13406360329

+86 17849695290

jerry@jrzc-bearing.com

www.jrzc-bearings.com

13806122270

JRZC®

SMALL FRICTION AND LARGE LOAD

JINRUI BEARING

JRZC®
金锐轴承

小摩擦 大承载

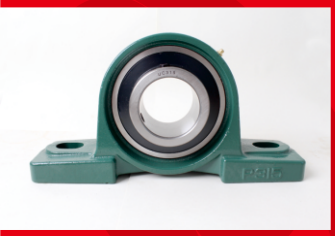

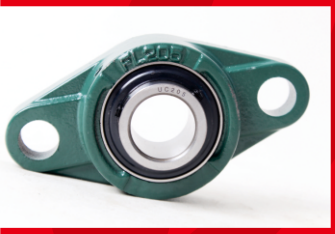

外球面轴承
Insert Bearing

外球面球轴承实际上是深沟球轴承的一种变型，特点是它的外圈外径表面为球面，可以配入轴承座相应的凹球面内起到调心的作用。

主要用来承受以径向负荷为主的径向与轴向联合负荷，一般不宜单独承受轴向负荷，此种轴承可以分别安装内圈（带全组滚子与保持器）和外圈。

外球面轴承优先适用于要求设备及零部件简单的场合，例如用于农业机械、运输系统或建筑机械上。

Insert bearing is actually a variation of the deep groove ball bearing, which outer diameter is spherical surface, can match into the corresponding concave spherical bearing self-aligning effect.

Is mainly used to bear radial direction load primarily radial and axial loads, and should not be commonly alone bear axial load, the bearing can be installed separately inner ring (with full set of roller and retainer) and outer ring.

Insert bearing is suitable for the required equipment and parts of simple situation, such as used for agricultural machinery, transportation systems or on construction machinery.

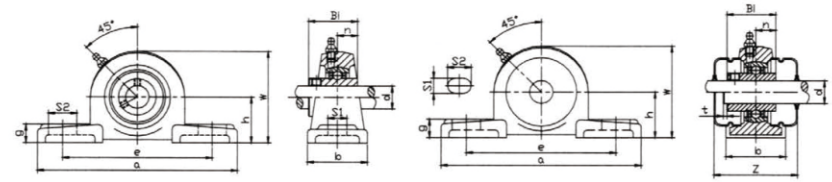

UCP200 SERIES
UCP200 系列

S–UCP200 SERIES
SM–UCP200 SERES

S–UCP200 系列
SM–UCP200 系列

带座轴承型号 BaemgUnit NO.	轴 径 Shaft Diad		基本尺寸 Dimension(mm)												螺 栓 Bolt Used		轴承型号 Bearing NO.	轴承座型号 Housing NO.	座重量 Housing Wt (kg)
	(in)	(mm)	h	a	e	b	S2	S1	g	w	t	z	Bi	n	(mm)	(in)			
UCP201–8 202–9 202–10 203–11 UCP201 202 203	1/2 9/16 5/8 11/16	12 15 17	30.2	127	95	38	19	13	14	62	2	51	31	12.7	M10	3/8	UC201–8 202–9 202–10 203–11 UC201 202 203	P203	0.33
UCP204–12 UCP204	3/4	20	33.3	127	95	38	19	13	14	65	2	51	31	12.7	M10	3/8	UC204–12 UC204	P204	0.46
UCP205–13 205–14 205–15 205–16 UCP206	13/16 7/8 15/16 1	25	36.5	140	105	38	19	13	14	65	2	57	34.1	14.3	M10	3/8	UC205–13 205–14 205–15 205–16 UC206	P205	0.60
UCP206–17 206–18 206–19 206–20 UCP206	1–1/16 1–1/8 1–3/16 1–1/4	30	42.9	165	121	48	21	17	17	83	2	62	38.1	15.9	M14	1/2	UC206–17 206–18 206–19 206–20 UC207	P206	0.97
UCP207–20 207–21 207–22 207–23 UCP207	1–1/4 1–5/16 1–3/8 1–7/16	35	47.6	167	127	48	21	17	18	93	3	72	42.9	17.5	M14	1/2	UC207–20 207–21 207–22 207–23 UC207	P207	1.00
UCP208–24 208–25 UCP208	1–1/2 1–9/16	40	49.2	184	137	54	21	17	18	98	3	82	49.2	19.0	M14	1/2	UC208–24 208–25 UC208	P208	1.30
UCP209–26 209–27 209–28 UCP209	1–5/8 1–11/16 1–3/4	45	54	190	146	54	21	17	20	106	3	82	49.2	19.0	M14	1/2	UC209–26 209–27 209–28 UC209	P209	1.40
UCP210–29 210–30 210–31 210–32 UCP210	1–13/16 1–7/8 1–15/16 2	50	57.2	206	159	60	25	20	21	114	3	87	51.6	19.0	M16	5/8	UC210–29 210–30 210–31 210–32 UC210	P210	1.83
UCP211–32 211–33 211–34 211–35 UCP211	2 2–1/16 2–1/8 2–3/16	55	63.5	219	171	60	25	20	23	126	4	92	55.6	22.2	M16	5/8	UC211–32 211–33 211–34 211–35 UC211	P211	2.4
UCP212–36 212–37 212–38 212–39 UCP212	2–1/4 2–5/16 2–3/8 2–7/16	60	69.8	241	184	70	25	20	25	138	4	102	65.1	25.4	M16	5/8	UC212–36 212–37 212–38 212–39 UC212	P212	2.8
UCP213–40 213–41 UCP213	2–1/2 2–9/16	65	76.2	265	203	70	29	25	27	151	4	107	65.1	25.4	M20	3/4	UC213–40 213–41 UC213	P213	3.5
UCP214–42 214–43 214–44 UCP214	2–5/8 2–11/16 2–3/4	70	79.4	266	210	72	31	25	27	157			74.6	30.2	M20	3/4	UC214–42 214–43 214–44 UC214	P214	4.45
UCP215–45 215–46 215–47 215–48 UCP215	2–13/16 2–7/8 2–15/16 3	75	82.6	275	217	74	31	25	28	163			77.8	33.3	M20	3/4	UC215–45 215–46 215–47 215–48 UC215	P215	4.9
UCP216–50 UCP216	3–1/8	80	88.9	292	232	78	31	25	30	175			82.6	33.3	M20	3/4	UC216–50 UC216	P216	5.8
UCP217–52 UCP217	3–1/4	85	95.2	310	247	83	31	25	32	187			85.7	34.1	M20	3/4	UC217–52 UC217	P217	6.9
UCP218–56 UCP218	3–1/4	90	101.6	327	262	88	33	27	33	200			96.0	39.7	M22	7/8	UC218–56 UC218	P218	8.10

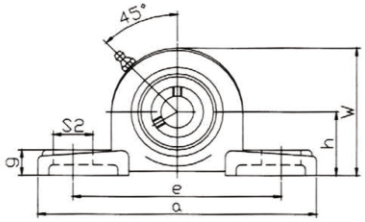

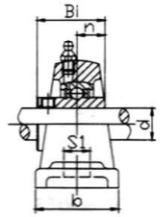

UCP300 SERIES
UCP300 系列

带座轴承型号 BaemgUnit NO.	轴 径 Shaft Diad		基本尺寸 Dimension(mm)										螺 栓 Bolt Used		轴承型号 Bearing NO.	轴承座型号 Housing NO.	座重量 Housing Wt (kg)
	(in)	(mm)	h	a	e	b	S2	S1	g	w	Bi	n	(mm)	(in)			
UCP305-14 305-15 305-16 UCP305	7/8 15/18 1	25	45	175	132	45	20	17	15	85	38	15	1/2	M14	UCP305-14 305-15 305-16 UCP305	P305	0.90
UCP306-18 306-19 UCP306	1-1/8 1-3/16	30	50	180	140	50	20	17	18	95	43	17	1/2	M14	UCP305-14 305-15 UCP305	P306	1.10
UCP307-20 307-21 307-22 307-23 UCP307	1-1/4 1-5/16 1-3/8 1-7/16	35	56	210	160	56	25	17	20	106	48	19	1/2	M14	UCP307-20 307-21 307-22 307-23 UCP307	P307	1.95
UCP308-24 308-25 UCP308	1-1/2 1-9/16	40	60	220	170	60	27	17	22	116	52	19	1/2	M14	UCP308-24 308-25 UCP308	P308	2.20
UCP309-26 309-27 309-28 UCP309	1-5/8 1-11/16 1-3/4	45	67	245	190	67	30	20	24	129	57	22	5/8	M14	UCP309-26 309-27 309-28 UCP309	P309	3.30
UCP310-30 310-31 UCP310	1-7/8 1-15/16	50	75	275	21	275	35	20	27	143	61	22	5/8	M16	UCP310-30 310-31 UCP310	P310	4.80
UCP311-32 311-34 311-35 UCP311	2 2-3/8 2-3/16	55	80	310	236	80	38	20	30	154	66	25	5/8	M16	UCP311-32 311-34 311-35 UCP311	P311	5.30
UCP312-36 312-38 312-39 UCP312	2-1/4 2-3/8 2-7/16	60	85	330	250	85	38	25	32	165	71	26	3/4	M20	UCP312-36 312-38 312-39 UC312	P312	6.30
UCP313-40 UCP313	2-1/2	65	90	340	260	90	38	25	33	176	75	30	3/4	M20	UC313-40 UC313	P313	8.00
UCP314-44 UCP314	2-3/4	70	95	360	280	90	40	27	35	187	78	33	7/8	M22	UC314-44 UC314	P314	8.30
UCP315-48 UCP315	3	75	100	380	290	100	40	27	35	198	82	32	7/8	M22	UC315-48 UC315	P315	9.50
UCP316-50 UCP316	3-1/8	80	106	400	300	110	40	27	40	210	86	34	7/8	M22	UC316-50 UC316	P316	12.50
UCP317-52 UCP317	3-1/4	85	112	420	320	110	45	33	40	220	96	40	1	M27	UC317-52 UC317	P317	14.50
UCP318-56 UCP318	3-1/2	90	118	430	330	110	45	33	45	235	96	40	1	M27	UC318-56 UC318	P318	20.40
UCP319-60 UCP319	3-3/4	95	125	470	360	120	50	36	45	250	103	41	1-1/8	M30	UC319-60 UC319	P319	22.30
UCP320-64 UCP320	4	100	140	490	380	120	50	36	50	275	108	42	1-1/8	M30	UC320-64 UC320	P320	25.00
UCP321		105	140	490	380	120	50	36	50	280	112	44		M33	UC321	P321	24.00
UCP322		110	150	520	400	140	55	40	55	300	117	46		M33	UC322	P322	27.50
UCP324		120	160	570	450	140	55	40	65	320	126	51		M33	UC324	P324	32.30
UCP326		130	180	600	480	140	55	40	75	355	135	54		M33	UC326	P326	41.00
UCP328		140	200	620	500	140	55	40	75	390	145	59		M33	UC328	P328	50.00

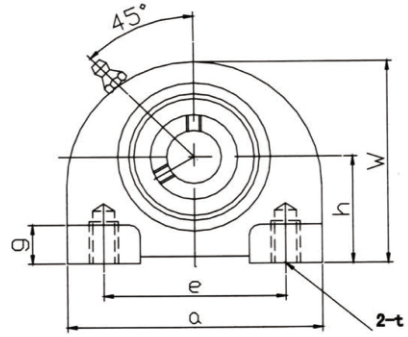

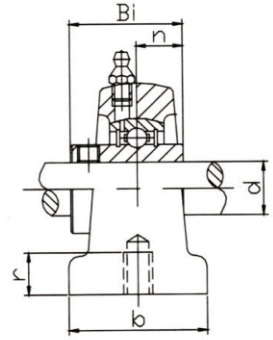

UCPA200 SERIES
UCPA200 系列

带座轴承型号 BaemgUnit NO.	轴 径 Shaft Diad		基本尺寸 Dimension(mm)										螺 栓 Bolt Used	轴承型号 Bearing NO.	轴承座型号 Housing NO.	座重量 Housing Wt (kg)
	(in)	(mm)	h	a	e	b	c	g	w	s	Bi	n	(mm)			
UCPA201-8 202-9 202-10 203-11 204-12 UCPA201 202 203 204	1/2 9/16 5/8 11/16 3/4	12 15 17 20	30.2	76	52	38	M10	15	8	62	31	12.7	M10×1.5	UC201-8 202-9 202-10 203-11 204-12 UC201 202 203 204	PA204	0.42
UCPA205-13 205-14 205-15 205-16 UCPA205	13/16 7/8 15/16 1	25	36.5	84	56	38	M10	15	10	72	34.1	14.3	M10×1.5	UC205-13 205-14 205-15 205-16 UC205	PA205	0.61
UCPA206-17 206-18 206-19 206-20 UCPA206	1-1/16 1-1/8 1-3/16 1-1/4	30	42.9	94	66	48	M14	18	10	84	38.1	15.9	M14×2	UC206-17 206-18 206-19 206-20 UC206	PA206	0.93
UCPA207-20 207-21 207-22 207-23 UCPA207	1-1/4 1-5/16 1-3/8 1-7/16	35	47.6	110	80	48	M14	20	12	95	42.9	17.5	M14×2	UC207-17 207-18 207-19 207-20 UC207	PA207	1.21
UCPA208-24 208-25 UCPA208	1-1/2 1-9/16	40	49.2	116	84	54	M14	20	12	100	49.2	19.0	M14×2	UC208-24 208-25 UC208	PA208	1.47
UCPA209-26 209-27 209-28 UCPA209	1-5/8 1-11/16 1-3/4	45	54.2	120	90	54	M14	25	12	108	49.2	19.0	M14×2	UC209-26 209-27 209-28 UC209	PA209	1.5
UCPA210-29 210-30 210-31 210-32 UCPA210	1-13/16 1-7/8 1-15/16 2	50	57.2	130	94	60	M16	25	14	116	51.6	19.0	M16×2	UC210-29 210-30 210-31 210-32 UC210	PA210	2.0
UCPA211-32 211-33 211-34 211-35 UCPA211	2 2-1/16 2-1/8 2-3/16	55	63.5	140	104	66	M16	25	14	125	55.6	22.2	M16×2	UC211-32 211-33 211-34 211-35 UC211	PA211	2.5
UCPA212-36 212-37 212-38 212-39 UCPA212	2 2-1/16 2-1/8 2-3/16	60	69.9	150	114	68	M16	25	15	138	65.1	25.4	M16×2	UC212-36 212-37 212-38 212-39 UC212	PA212	2.7
UCPA213-40 213-41 UCPA213	2-1/2 2-9/16	65	76.2	160	124	70	M16	2515	150	65.1	25.4	25.4	M16×2	UC213-40 213-41 UC213	PA213	4.37

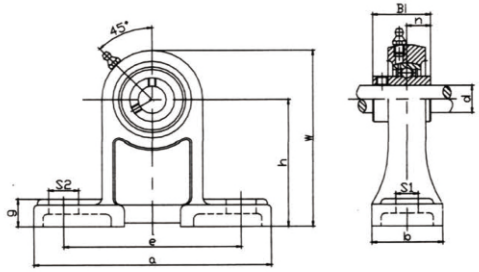

UCPA200 SERIES
UCPA200 系列

带座轴承型号 BaemgUnit NO.	轴 径 Shaft Diad (in)	轴 径 Shaft Diad (mm)	基本尺寸 Dimension(mm) h	a	e	b	S2	S1	g	w	Bi	n	螺 栓 Bolt Used (mm)	(in)	轴承型号 Bearing NO.	轴承座型号 Housing NO.	座重量 Housing Wt (kg)
UCPH201-8 202-9 202-10 203-11 204-12 UCPH201 202 203 204	1/2 9/16 5/8 11/16 3/4	12 15 17 20	70	127	95	40	19	13	15	101	31	12.7	M10	3/8	UC201-8 202-9 202-10 203-11 204-12 UC201 202 203 204	PH204	0.75
UCPH205-13 205-14 205-15 205-16 UCPH205	13/16 7/8 15/16 1	25	80	140	105	50	19	13	16	114	34	14.3	M10	3/8	UC205-13 205-14 205-15 205-16 UC205	PH205	1.0
UCPH206-17 206-18 206-19 206-20 UCPH206	1-1/16 1-1/8 1-3/16 1-1/4	30	90	165	121	50	21	17	18	130	38.1	15.9	M14	1/2	UC206-17 206-18 206-19 206-20 UC206	PH206	1.42
UCPH207-20 207-21 207-22 207-23 UCPH207	1-1/4 1-5/16 1-3/8 1-7/16	35	95	167	127	60	21	17	19	140	42.9	17.5	M14	1/2	UC207-20 207-21 207-22 207-23 UC207	PH207	1.55
UCPH208-24 208-25 UCPH208	1-1/2 1-9/16	40	100	184	137	70	25	17	19	149	49.2	19.0	M14	1/2	UC208-24 208-25 UC208	PH208	2.15
UCPH209-26 209-27 209-28 UCPH209	1-5/8 1-11/16 1-3/4	45	105	190	46	70	25	17	20	157	49.2	19.0	M14	1/2	UC209-26 209-27 209-28 UC209	PH209	2.31
UCPH210-29 210-30 210-31 210-32 UCPH210	1-13/16 1-7/8 1-15/16 2	50	110	206	159	70	25	20	22	165	51.6	19.0	M16	5/8	UC210-29 210-30 210-31 210-32 UC210	PH210	2.80
UCPH211-32 211-33 211-34 211-35 UCPH211	2 2-1/16 2-1/8 2-3/16	55	120	219	171	75	22	19	22	181	55.6	22.2	M16	5/8	UC211-32 211-33 211-34 211-35 UC211	PH211	4.4
UCPH212-36 212-37 212-38 212-39 UCPH212	2-1/4 2-5/16 2-3/8 2-7/16	60	130	235	184	85	23	19	25	197	65.1	25.4	M16	5/8	UC212-36 212-37 212-38 212-39 UC212	PH212	4.8
UCPH213-40 213-41 UCPH213	2-1/2 2-9/16	65	140	262	203	95	28	23	27	212	65.1	25.4	M20	3/4	UC213-40 213-41 UC213	PH213	5.69
UCPH214-42 214-43 214-44 UCPH214	2-5/8 2-11/16 2-3/4	70	150	268	210	105	28	23	28	225	74.6	30.2	M20	3/4	UC214-42 214-43 214-44 UC214	PH214	6.2
UCPH215-45 215-46 215-47 215-48 UCPH215	2-13/16 2-7/8 2-15/16 3	75	160	275	217	115	28	23	29	238	77.8	33.3	M20	3/4	UC215-45 215-46 215-47 215-48 UC215	PH215	7.4
UCPH216-50 UCPH216	3-1/8	80	170	290	232	125	28	23	30	253	82.6	33.3	M20	3/4	UC216-50 UC216	PH216	8.0

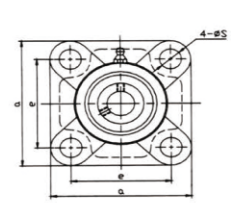

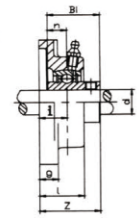

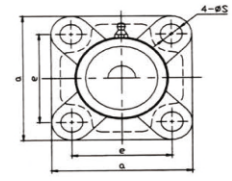

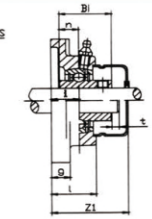

UCF200 SERIES
UCF200 系列

SM-UCF200 SERIES SM-UCF200 系列
S-UCF200 SERIES S-UCF200 系列

带座轴承型号 BaemgUnit NO.	轴 径 Shaft Diad (in)	轴 径 Shaft Diad (mm)	基本尺寸 Dimension(mm) a	e	i	g	l	s	t	z1	z	Bi	n	螺 栓 Bolt Used (mm)	(in)	轴承型号 Bearing NO.	轴承座型号 Housing NO.	座重量 Housing Wt (kg)
UCF201-8 202-9 202-10 203-11 UCF201 202 203	1/2 9/16 5/8 11/16	12 15 17	76	54	15	11	25.5	11.5			31	26	10	M10	3/8	UCW201-8 202-9 202-10 203-11 UCW201 202 203	F203	0.5
UCF201-8 202-9 202-10 203-11 204-12 UCF201 202 203 204	1/2 9/16 5/8 11/16 3/4	12 15 17 20	86	64	15	12	25.5	12	2	40.5	33.3	31	12.7	M10	3/8	UC201-8 202-9 202-10 203-11 204-12 UC201 202 203 204	F204	0.6
UCF205-13 205-14 205-15 205-16 UCF205	13/16 7/8 15/16 1	25	95	70	16	14	27	12	2	44.5	35.8	34.1	14.3	M10	3/8	UC205-13 205-14 205-15 205-16 UC205	F205	0.86
UCF206-17 206-18 206-19 206-20 UCF206	1-1/16 1-1/8 1-3/16 1-1/4	30	108	83	18	14	31	12	2	49	40.2	38.1	15.9	M10	3/8	UC206-17 206-18 206-19 206-20 UC206	F206	1.1
UCF207-20 207-21 207-22 207-23 UCF207	1-1/4 1-5/16 1-3/8 1-7/16	35	117	92	19	16	34	14	3	55	44.4	42.9	17.5	M12	7/16	UC207-20 207-21 207-22 207-23 UC207	F207	1.6
UCF208-24 208-25 UCF208	1-1/2 1-9/16	40	130	102	21	16	36	16	3	62	51.2	49.2	19	M14	1/2	UC208-24 208-25 UC208	F208	19
UCF209-26 209-27 209-28 UCF209	1-5/8 1-11/16 1-3/4	45	137	105	22	18	38	16	3	63	52.2	49.2	19	M14	1/2	UC209-26 209-27 209-28 UC209	F209	2.4
UCF210-29 210-30 210-31 210-32 UCF210	1-13/16 1-7/8 1-15/16 2	50	143	111	22	18	40	16	3	66.5	54.6	51.6	19	M14	1/2	UC210-29 210-30 210-31 210-32 UC210	F210	2.6
UCF211-32 211-33 211-34 211-35 UCF211	2 2-1/16 2-1/8 2-3/16	55	162	130	25	20	43	19	4	71	58.4	55.6	22.2	M16	5/8	UC211-32 211-33 211-34 211-35 UC211	F211	3.5
UCF212-36 212-37 212-38 212-39 UCF212	2-1/4 2-5/16 2-3/8 2-7/16	60	175	143	29	20	48	19	4	80	68.7	65.1	25.4	M16	5/8	UC212-36 212-37 212-38 212-39 UC212	F212	4.2
UCF213-40 213-41 UCF213	2-1/2 2-9/16	65	187	149	30	20	50	19	4	83.5	69.7	65.1	25.4	M16	5/8	UC213-40 213-41 UC213	F213	5.3
UCF214-42 214-43 214-44 UCF214	2-5/8 2-11/16 2-3/4	70	193	152	31	24	54	19			75.4	74.6	30.2	M16	5/8	UC214-42 214-43 214-44 UC214	F214	5.5
UCF215-45 215-46 215-47 215-48 UCF215	2-13/16 2-7/8 2-15/16 3	75	200	159	34	24	56	19			78.5	77.8	33.3	M16	5/8	UC215-45 215-46 215-47 215-48 UC215	F215	6.2
UCF216-50 UCF216	3-1/8	80	208	165	34	24	58	23			83.3	82.6	33.3	M20	5/8	UC216-50 UC216	F216	7.7
UCF217-52 UCF217	3-1/4	85	220	175	36	26	63	23			87.6	85.7	34.1	M20	3/4	UC217-52 UC217	F217	9
UCF218-56 UCF218	3-1/2	90	235	187	40	26	68	23			96.3	96.0	39.7	M20	3/4	UC218-56 UC218	F218	11.3

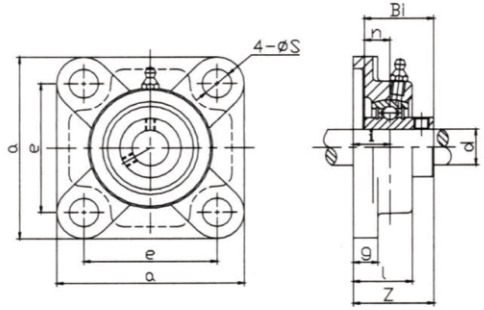

UCF300 SERIES
UCF300 系列

带座轴承型号 BaemgUnit NO.	轴 径 Shaft Diad		基本尺寸 Dimension(mm)									螺 栓 Bolt Used		轴承型号 Bearing NO.	轴承座型号 Housing NO.	座重量 Housing Wt (kg)
	(in)	(mm)	a	e	i	g	l	s	z	Bi	n	(mm)	(in)			
UCF305-14 305-15 305-16 UCF305	7/8 15/16 1	25	110	80	16	13	29	16	39	38	15	M14	1/2	UC305-14 305-15 305-16 UC305	F305	0.90
UCF306-18 306-19 UCF306	1-1/8 1-3/16	30	125	95	18	15	32	16	44	43	17	M14	1/2	UC306-18 306-19 UC306	F306	1.28
UCF307-20 307-21 307-22 307-23 UCF307	1-1/4 1-5/16 1-3/8 1-7/16	35	135	100	20	16	36	19	49	48	19	M16	5/8	UC307-20 307-21 307-22 307-23 UC307	F307	1.57
UCF308-24 308-25 UCF308	1-1/2 1-9/16	40	150	112	23	17	40	19	56	52	19	M16	5/8	UC308-24 308-25 UC308	F308	2.00
UCF309-26 309-27 309-28 UCF309	1-5/8 1-11/16 1-3/4	45	160	125	25	18	44	19	60	57	22	M16	5/8	UC309-26 309-27 309-28 UC309	F309	2.60
UCF310-30 310-31 UCF310	1-7/8 1-15/16	50	175	132	28	19	48	23	67	61	22	M20	3/4	UC310-30 310-31 UC310	F310	2.68
UCF311-32 311-34 311-35 UCF311	2 2-1/8 2-3/16	55	185	140	30	20	52	23	71	66	25	M20	3/4	UC311-32 311-34 311-35 UC311	F311	3.30
UCF312-36 312-38 312-39 UCF312	2-1/4 2-3/8 2-7/16	60	195	150	33	22	56	23	78	71	26	M20	3/4	UC312-36 312-38 312-39 UC312	F312	4.1
UCF313-40 UCF313	2-1/2	65	208	166	33	22	58	23	78	75	30	M20	3/4	UC313-40 UC313	F313	4.9
UCF314-44 UCF314	2-3/4	70	226	178	36	25	61	25	81	78	33	M22	7/8	UC314-44 UC314	F314	5.6
UCF315-48 UCF315	3	75	236	184	39	25	66	25	89	82	32	M22	7/8	UC315-48 UC315	F315	7.00
UCF316-50 UCF316	3-1/8	80	250	196	38	27	68	31	90	86	34	M27	1	UC316-50 UC316	F316	9.0
UCF317-52 UCF317	3-1/4	85	260	204	44	27	74	31	100	96	40	M27	1	UC317-52 UC317	F317	10.5
UCF318-56 UCF318	3-1/2	90	280	216	44	30	76	35	100	96	40	M30	1-1/8	UC318-56 UC318	F318	12.8
UCF319-60 UCF319	3-3/4	95	290	228	59	30	94	35	121	103	41	M30	1-1/8	UC319-60 UC319	F319	13.80
UCF320-64 UCF320	4	100	310	242	59	32	94	38	125	108	42	M33	1-1/4	UC320-64 UC320	F320	15.2
UCF321		105	310	242	59	32	94	38	127	112	44	M33	1-1/4	UC321	F321	15.00
UCF322		110	340	266	60	35	96	41	131	117	46	M36		UC322	F322	21.80
UCF324		120	370	290	65	40	110	41	140	126	51	M36		UC324	F324	25.20
UCF326		130	410	320	65	45	115	41	146	135	54	M36		UC326	F326	37.00
UCF328		140	450	350	75	55	125	41	161	145	59	M36		UC328	F328	57.80

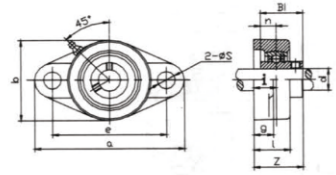

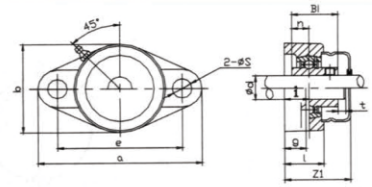

UCFL200 SERIES
UCFL200 系列

S-UCFL200 SERIES S-UCFL200 系列
SM-UCFL200 SERIES SM-UCFL200 系列

带座轴承型号 BaemgUnit NO.	轴 径 Shaft Diad		基本尺寸 Dimension(mm)												螺 栓 Bolt Used		轴承型号 Bearing NO.	轴承座型号 Housing NO.	座重量 Housing Wt (kg)
	(in)	(mm)	a	e	i	g	l	s	b	t	z_1	z	Bi	n	(in)	(mm)			
UCFL201-8 202-9 202-10 203-11 UCFL201 202 203	1/2 9/16 5/8 11/16	12 15 17	99	76.5	15	13	25.5	11.5	57			31	26	10	M10	3/8	UCW201-8 202-9 202-10 203-11 UCW201 202 203	FL203	0.25
UCFL201-8 202-9 202-10 203-11 204-12 UCFL201 202 203 204	1/2 9/16 5/8 11/16 3/4	12 15 17 20	113	90	15	12	25.5	12	60	2	40.5	33.3	31	12.7	M10	3/8	UC201-8 202-9 202-10 203-11 204-12 UC201 202 203 204	FL204	0.28
UCFL205-13 205-14 205-15 205-16 UCFL205	13/16 7/8 15/16 1	25	130	99	16	14	27	16	68	2	44.5	35.7	34.1	14.3	M14	1/2	UC205-13 205-14 205-15 205-16 UC205	FL205	0.4
UCFL206-17 206-18 206-19 206-20 UCFL206	1-1/16 1-1/8 1-3/16 1-1/4	30	148	117	18	14	31	16	80	2	49	40.2	38.1	15.9	M14	1/2	UC206-17 206-18 206-19 206-20 UC206	FL206	0.54
UCFL207-20 207-21 207-22 207-23 UCFL207	1-1/4 1-5/16 1-3/8 1-7/16	35	161	130	19	16	34	16	90	3	55	44.4	42.9	17.5	M14	1/2	UC207-20 207-21 207-22 207-23 UC207	FL207	0.65
UCFL208-24 208-25 UCFL208	1-1/2 1-9/16	40	175	144	21	16	36	16	100	3	62	51.2	49.2	19	M14	1/2	UC208-24 208-25 UC208	FL208	0.8
UCFL209-26 209-27 209-28 UCFL209	1-5/8 1-11/16 1-3/4	45	188	148	22	18	38	19	108	3	63	52.2	49.2	19	M16	5/8	UC209-26 209-27 209-28 UC209	FL209	1.15
UCFL210-26 210-27 210-28 210-28 UCFL210	1-13/16 1-7/8 1-15/16 2	50	197	157	22	18	40	19	115	3	66.5	54.6	51.6	19	M16	5/8	UC210-29 210-30 210-31 210-32 UC210	FL210	1.25
UCFL211-29 211-30 211-31 211-32 UCFL211	2 2-1/16 2-1/8 2-3/16	55	224	184	25	20	43	19	130	4	71	58.4	55.6	22.2	M16	5/8	UC211-32 211-33 211-34 211-35 UC211	FL211	1.85
UCFL212-36 212-37 212-38 212-39 UCFL212	2-1/4 2-5/16 2-3/8 2-7/16	60	250	202	29	20	48	23	140	4	80	68.7	65.1	25.4	M20	3/4	UC212-36 212-37 212-38 212-39 UC212	FL212	2.10
UCFL213-40 213-41 UCFL213	2-1/2 2-9/16	65	258	210	30	24	50	23	155	4	83.5	69.7	65.1	25.4	M20	3/4	UC213-40 213-41 UC213	FL213	2.8
UCFL214-42 214-43 214-44 UCFL214	2-5/8 2-11/16 2-3/4	70	265	216	31	24	54	23	160			75.4	74.6	30.2	M20	3/4	UC214-42 214-43 214-44 UC214	FL214	3.2
UCFL215-45 215-46 215-47 215-48 UCFL215	2-13/16 2-7/8 2-15/16 3	75	275	225	34	24	56	23	165			78.5	77.8	33.3	M20	3/4	UC215-45 215-46 215-47 215-48 UC215	FL215	2.8
UCFL216-45 UCFL216	3-1/8	80	290	233	34	24	58	25	180			83.3	82.6	33.3	M22	7/8	UC216-50 UC216	FL216	3.53
UCFL217-45 UCFL217	3-1/4	85	305	248	36	26	63	25	190			87.6	85.7	34.1	M22	7/8	UC217-52 UC217	FL217	5.5
UCFL218-45 UCFL218	3-1/2	90	320	265	40	26	68	25	205			96.3	96	39.7	M22	7/8	UC218-56 UC218	FL218	6.0

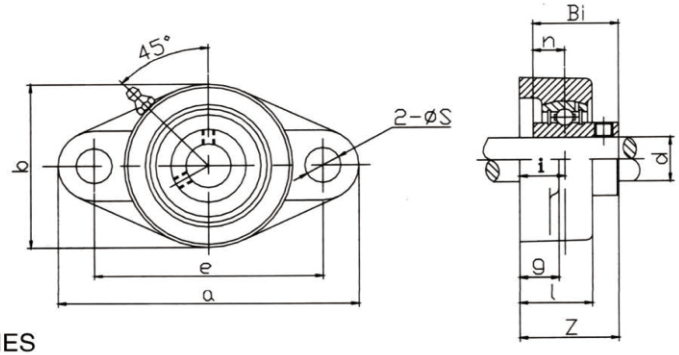

UCFL300 SERIES
UCFL300 系列

带座轴承型号 BaemgUnit NO.	轴 径 Shaft Diad		基本尺寸 Dimension(mm)										螺 栓 Bolt Used		轴承型号 Bearing NO.	轴承座型号 Housing NO.	座重量 Housing Wt (kg)
	(in)	(mm)	a	e	i	g	l	s	b	z	Bi	n	(in)	(mm)			
UCFL305-14 305-15 305-16 UCFL305	7/8 15-16 1	25	150	113	16	13	29	19	80	39	38	15	M16	5/8	UC305-14 305-15 305-16 UC305	FL305	0.7
UCFL306-18 306-19 UCFL306	1-1/8 1-3/16	30	180	134	18	15	32	23	90	44	43	17	M20	3/4	UC306-18 306-19 UC306	FL306	1.1
UCFL307-20 307-21 307-22 307-23 UCFL307	1-1/4 1-5/16 1-3/8 1-7/16	35	185	141	20	16	36	23	100	49	48	19	M20	3/4	UC307-20 307-21 307-22 307-23 UC307	FL307	1.2
UCFL308-24 308-25 UCFL308	1-1/2 1-9/16	40	200	158	23	17	40	23	112	56	52	19	M20	3/4	UC308-24 308-25 UC308	FL308	1.5
UCFL309-26 309-27 309-28 UCFL309	1-5/8 1-11/16 1-3/4	45	230	177	25	18	44	25	125	60	57	22	M22	7/8	UC309-26 309-27 309-28 UC309	FL309	2.2
UCFL310-30 310-31 UCFL310	1-7/8 1-15/16	50	240	187	28	19	48	25	140	67	61	22	M22	7/8	310-30 310-31 UC310	FL310	2.7
UCFL311-32 311-34 311-35 UCFL311	2 2-1/8 2-3/16	55	250	198	30	20	52	25	150	71	66	25	M22	7/8	UC311-32 311-34 311-35 UC311	FL311	3.15
UCFL312-36 312-38 312-39 UCFL312	2-1/4 2-3/8 2-7/16	60	270	212	33	22	56	31	160	78	71	26	M27	1	UC312-36 312-38 312-39 UC312	FL312	3.30
UCFL313-40 UCFL313	2-1/2	65	295	240	33	25	58	31	175	78	75	30	M27	1	UC313-40 UC313	FL313	5.00
UCFL314-44 UCFL314	2-3/4	70	315	250	36	28	61	35	185	81	78	33	M30	1-1/8	UC314-44 UC314	FL314	6.10
UCFL315-48 UCFL315	3	75	320	260	39	30	66	35	195	89	82	32	M30	1-1/8	UC315-48 UC315	FL315	6.50
UCFL316-50 UCFL316	3-1/8	80	355	285	38	32	68	38	210	90	86	34	M33	1-1/4	UC316-50 UC316	FL316	8.50
UCFL317-52 UCFL317	3-1/4	85	370	300	44	32	74	38	220	100	96	40	M33	1-1/4	UC317-52 UC317	FL317	10.50
UCFL318-56 UCFL318	3-1/2	90	385	315	44	36	75	38	235	100	96	40	M3	1-1/4	UC318-56 UC318	FL318	12.50
UCFL319-60 UCFL319	3-3/4	95	405	330	59	40	94	41	250	121	103	41	M36		UC319-60 UC319	FL319	16.00
UCFL320-64 UCFL320	4	100	440	360	59	40	94	44	270	125	108	42	M39		UC320-64 UC320	FL320	17.30
UCFL321		105	440	360	59	40	94	44	270	127	112	44	M39		UC321	FL321	15.00
UCFL322		110	470	390	60	42	96	44	300	131	117	46	M39		UC322	FL322	20.20
UCFL324		120	520	430	65	48	110	47	330	140	126	51	M42		UC324	FL324	29.50
UCFL326		130	550	460	65	50	115	47	360	146	135	54	M42		UC326	FL326	38.00
UCFL328		140	600	500	75	60	125	51	400	161	145	59	M45		UC328	FL328	54.00

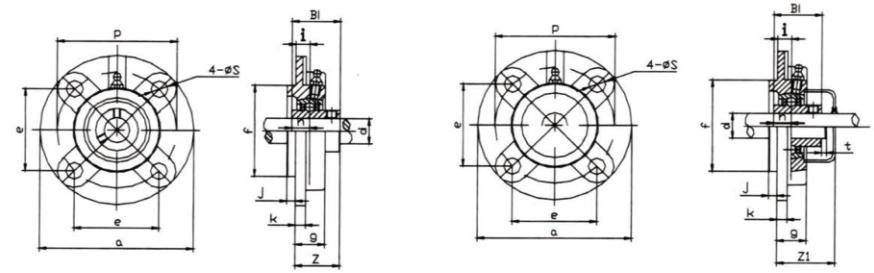

UCFC200 SERIES
UCFC200 系列

SM-UCFC200 SERIES SM-UCFC200 系列
S-UCFC200 SERIES S-UCFC200 系列

带座轴承型号 BaemgUnit NO.	轴 径 Shaft Diad		基本尺寸 Dimension(mm)														螺 栓 Bolt Used		轴承型号 Bearing NO.	轴承座型号 Housing NO.	座重量 Housing Wt (kg)
	(in)	(mm)	a	p	e	i	s	j	k	g	f	t	z_1	z	Bi	n	(in)	(mm)			
UCFC201-8 202-9 202-10 203-11 204-12 UCFC201 202 203 204	1/2 9/16 5/8 11/16 3/4	12 15 17 20	100	78	55.1	10	12	5	7	20.5	62	2	35.5	28.3	31	12.7	M10	3/8	UC201-8 202-9 202-10 203-11 204-12 UC201 202 203 204	FC204	0.55
UCFC205-13 205-14 205-15 205-16 UCFC205	13/16 7/8 15/16 1	25	115	90	53.6	10	12	6	7	21	70	2	38.5	29.7	34.1	14.3	M10	3/8	UC205-13 205-14 205-15 205-16 UC205	FC205	0.8
UCFC206-17 206-18 206-19 206-20 UCFC206	1-1/16 1-1/8 1-3/16 1-1/4	30	125	100	70.7	10	12	8	8	23	80	2	41	32.2	38.1	15.9	M10	3/8	UC206-17 206-18 206-19 206-20 UC206	FC206	1
UCFC207-20 207-21 207-22 207-23 UCFC207	1-1/4 1-5/16 1-3/8 1-7/16	35	135	110	77.8	11	14	8	9	26	90	3	47	36.4	42.9	17.5	M12	7/16	UC207-20 207-21 207-22 207-23 UC207	FC207	1.2
UCFC208-24 208-25 UCFC208	1-1/2 1-9/16	40	145	120	84.8	11	14	10	9	26	100	3	52	41.2	49.2	19	M12	7/16	UC208-24 208-25 UC208	FC208	1.45
UCFC209-26 209-27 209-28 UCFC209	1-5/8 1-11/16 1-3/4	45	160	132	93.3	10	16	12	14	26	105	3	51	40.2	49.2	19	M14	1/2	UC209-26 209-27 209-28 UC209	FC209	2.1
UCFC210-29 210-30 210-31 210-32 UCFC210	1-13/16 1-7/8 1-15/16 2	50	165	138	97.6	10	16	12	14	28	110	4	53.5	42.6	51.6	19	M14	1/2	UC210-29 210-30 210-31 210-32 UC210	FC210	2.1
UCFC211-32 211-33 211-34 211-35 UCFC211	2 2-1/16 2-1/8 2-3/16	55	185	150	106.1	13	19	12	15	31	125	4	59	46.4	55.6	22.2	M16	5/8	UC211-32 211-33 211-34 211-35 UC211	FC211	3.1
UCFC212-36 212-37 212-38 212-39 UCFC212	2-1/4 2-5/16 2-3/8 2-7/16	60	195	160	113.1	17	19	12	15	36	135	4	68	56.7	65.1	25.4	M16	5/8	UC212-36 212-37 212-38 212-39 UC212	FC212	3.2
UCFC213-40 213-41 UCFC213	2-1/2 2-9/16	65	205	170	120.2	16	19	14	15	36	145	4	69.5	55.7	65.1	25.4	M16	5/8	UC213-40 213-41 UC213	FC213	3.75
UCFC214-42 214-43 214-44 UCFC214	2-5/8 2-11/16 2-3/4	70	215	177	125.1	17	19	14	18	40	150			61.4	74.6	30.2	M16	5/8	UC214-42 214-43 214-44 UC214	FC214	4.75
UCFC215-45 215-46 215-47 215-48 UCFC215	2-13/16 2-7/8 2-5/16 3	75	220	184	130.1	18	19	16	18	40	160			62.5	77.8	33.3	M16	5/8	UC215-45 215-46 215-47 215-48 UC215	FC215	5
UCFC216-50 UCFC216	3-1/8	80	240	200	141.4	18	23	16	18	42	170			67.3	82.6	33.3	M20	3/4	UC216-50 UC216	FC216	6.1
UCFC216-52 UCFC216	3-1/4	85	250	208	147.1	18	23	18	20	45	180			69.6	85.7	34.1	M20	3/4	UC217-52 UC217	FC217	7.1
UCFC216-56 UCFC216	3-1/2	90	265	220	155.5	22	23	18	20	50	190			78.3	96	39.7	M20	3/4	UC218-56 UC218	FC218	8

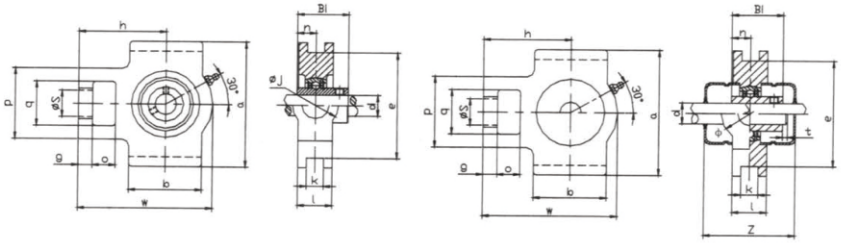

UCT200 SERIES
UCT200 系列

SM-UCT200 SERIES SM-UCT200 系列
S-UCT200 SERIES S-UCT200 系列

带座轴承型号 BaemgUnit NO.	轴 径 Shaft Diad		基本尺寸 Dimension(mm)																	轴承型号 Bearing NO.	轴承座型号 Housing NO.	座重量 Housing Wt (kg)
	(in)	(mm)	o	g	p	q	s	b	k	e	a	w	j	l	h	t	z	Bi	n			
UCT201-8 202-9 202-10 203-11	1/2 9/16 5/8 11/16	12 15 17 20	16	10	51	32	19	51	12	76	89	94	32	21	61	2	51	31	12.7	UC201-13 202-14 202-15 203-16	T204	0.56
UCT205-13 205-14 205-15 205-16 UCT205	13/16 7/8 15/16 1	25	16	10	51	32	19	51	12	76	89	97	32	24	62	2	57	34.1	14.3	UC205-13 205-14 205-15 205-16 UC205	T205	0.63
UCT206-17 206-18 206-19 206-20 UCT206	1-1/16 1-1/8 1-3/16 1-1/4	30	16	10	56	37	22	57	12	89	102	113	37	28	70	2	62	38.1	15.9	UC206-17 206-18 206-19 206-20 UC206	T206	0.95
UCT207-20 207-21 207-22 207-23 UCT207	1-1/4 1-5/6 1-3/8 1-7/16	35	16	13	64	37	22	64	12	89	102	129	37	30	78	3	72	42.9	17.5	UC207-20 207-21 207-22 207-23 UC207	T207	1.09
UCT208-24 208-25 UCT208	1-1/2 1-9/16	40	19	16	83	49	29	83	16	102	114	144	49	33	88	3	82	49.2	19	UC208-24 208-25 UC208	T210	1.72
UCT209-26 209-27 209-28 UCT209	1-5/8 1-11/16 1-3/4	45	19	16	83	49	29	83	16	102	117	144	49	35	87	3	82	49.2	19	UC209-26 209-27 209-28 UC209	T209	1.75
UCT210-29 210-30 210-31 210-32 UCT210	1-13/16 1-7/8 1-15/16 2	50	19	16	83	49	29	86	16	102	117	149	49	37	90	3	87	51.6	19	UC210-29 210-30 210-31 210-32 UC210	T210	1.75
UCT211-32 211-33 211-34 211-35 UCT211	2 2-1/16 2-1/8 2-3/16	55	25	19	102	64	35	95	22	130	146	171	64	38	106	4	92	55.6	22.2	UC211-32 211-33 211-34 211-35 UC211	T211	2.8
UCT212-36 212-37 212-38 212-39 UCT212	2-1/4 2-5/16 2-3/8 2-7/16	60	32	19	102	64	35	102	22	130	146	194	64	42	119	4	102	65.1	25.4	UC212-36 212-37 212-38 212-39 UC212	T212	3.4
UCT213-40 213-41 UCT213	2-1/2 2-9/16	65	32	21	111	70	41	121	26	151	167	224	70	44	137	4	107	65.1	25.4	UC213-40 213-41 UC213	T213	5
UCT214-42 214-43 214-44 UCT214	2-5/8 2-11/16 2-3/4	70	32	21	111	70	41	121	26	151	167	224	70	46	137			74.6	30.2	UC214-42 214-43 214-44 UC214	T214	4.7
UCT215-45 215-46 215-47 215-48 UCT215	2-13/16 2-7/8 2-15/16 3	75	32	21	111	70	41	121	26	151	167	232	70	48	140			77.8	33.3	UC215-45 215-46 215-47 215-48 UC215	T215	5.1
UCT216-45 UCT216	3-1/8	80	32	21	111	70	41	121	26	165	184	235	70	51	140			82.6	33.3	UC216-50 UC216	T216	5.5
UCT217-45 UCT217	3-1/4	85	38	29	124	73	48	157	30	173	198	260	73	54	162			85.7	34.1	UC217-52 UC217	T217	7.4
UCT218-45 UCT218	3-1/2	90	40	30	130	80	48	140	30	190	215	275	80	55	170			96	39.7	UC218-56 UC218	T218	10.2

JRZC® 金锐轴承 TAKE-UP UNITS 带滑块座外球面轴承

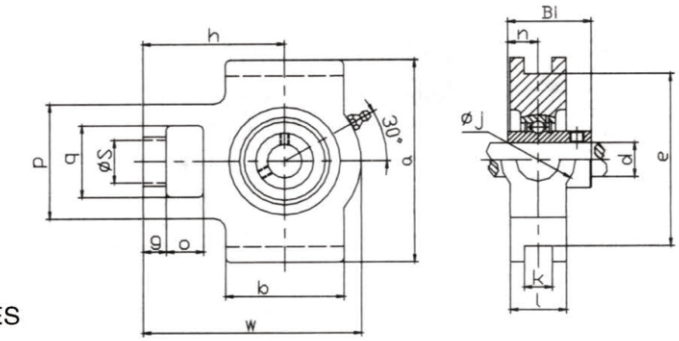

UCT300 SERIES
UCT300 系列

带座轴承型号 BaemgUnit NO.	轴 径 Shaft Diad		基本尺寸 Dimension(mm)															轴承型号 Bearing NO.	轴承座型号 Housing NO.	座重量 Housing Wt (kg)
	(in)	(mm)	o	g	p	q	s	b	k	e	a	w	j	i	h	Bi	n			
UCT305-14 305-15 305-16 UCT305	7/8 15/16 1	25	16	12	62	36	26	65	12	80	89	122	36	26	76	38	15	UC305-14 305-15 305-16 UC305	T305	1.05
UCT306-18 306-19 UCT306	1-1/8 1-3/16	30	18	14	70	41	28	74	16	90	100	137	41	28	85	43	17	UC306-18 306-19 UC306	T306	1.24
UCT307-20 307-21 307-22 307-23 UCT307	1-1/4 1-5/16 1-3/8 1-7/10	35	20	15	75	45	30	80	16	100	111	150	45	32	94	48	19	UC307-20 307-21 307-22 307-23 UC307	T307	1.69
UCT308-24 308-25 UCT308	1-1/2 1-9/16	40	22	17	83	50	32	89	18	112	124	162	50	34	100	52	19	UC308-24 308-25 UC308	T308	2.04
UCT309-26 309-27 309-28 UCT309	1-5/8 1-11/16 1-3/4	45	24	18	90	55	34	97	18	125	138	178	55	38	110	57	22	UC309-26 309-27 309-28 UC309	T309	2.72
UCT310-30 310-31 UCT310	1-7/8 1-15/16	50	27	20	98	61	37	106	20	140	151	191	61	40	117	61	22	UC310-30 310-31 UC310	T310	3.35
UCT311-32 311-34 311-35 UCT311	2 2-1/8 2-3/16	55	29	21	105	66	39	115	22	150	163	207	66	44	127	66	25	UC311-32 311-34 311-35 UC311	T311	4.33
UCT312-36 312-38 312-39 UCT312	2-1/4 2-3/8 2-7/16	60	31	23	113	71	41	123	22	160	178	220	71	46	135	71	26	UC312-36 312-38 312-39 UC312	T312	5
UCT313-40 UCT313	2-1/2	65	32	25	116	71	43	134	26	170	190	238	80	50	146	78	30	UC313-40 UC313	T313	6
UCT314-44 UCT314	2-3/4	70	36	25	130	85	46	140	26	180	202	525	90	52	155	78	33	UC314-44 UC314	T314	7.05
UCT315-48 UCT315	3	75	36	25	132	85	46	150	26	192	216	262	90	55	160	82	32	UC315-48 UC315	T315	9.28
UCT316-50 UCT316	3-1/8	80	42	28	150	98	53	160	30	204	230	282	102	60	174	86	34	UC316-50 UC316	T316	10.03
UCT317-52 UCT317	3-1/4	85	42	30	152	98	53	170	32	214	240	298	102	64	183	96	40	UC317-52 UC317	T317	13.3
UCT318-56 UCT318	3-1/2	90	46	30	160	160	57	175	32	228	255	312	110	66	192	96	40	UC318-56 UC318	T318	14.1
UCT319-60 UCT319	3-3/4	95	46	31	165	106	57	180	35	240	270	322	110	72	197	103	41	UC319-60 UC319	T319	16.3
UCT320-64 UCT320	4	100	48	32	175	115	59	200	35	260	290	345	120	75	210	108	42	UC320-64 UC320	T320	21.2
UCT321		105	48	32	175	115	59	200	35	260	290	345	120	75	210	112	44	UC321	T321	19.8
UCT322		110	52	38	185	125	65	215	38	285	320	385	130	80	235	117	46	UC322	T322	25.7
UCT324		120	60	42	210	140	70	230	45	320	355	432	140	90	267	126	51	UC324	T324	36.5
UCT326		130	65	45	220	150	75	240	50	350	385	465	150	100	285	135	54	UC326	T326	46
UCT328		140	70	50	230	160	80	255	50	380	415	515	155	100	315	145	59	UC328	T328	55.5

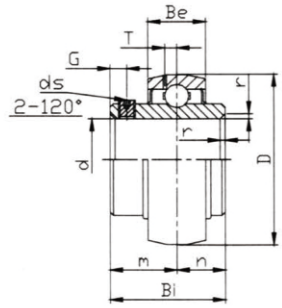

UC200 SERIES
UC200 系列

座轴承型号 Housing NO.	轴 径 Shaft Diad1		基本尺寸 Dime80nsion(mm)									额定动载荷 Basic Load Rating (kg)	额定静负荷 Basic Static Load Rating (kg)	座重量 Housing wt (kg)
	(in)	(mm)	D	Bi	Be	r	n	m	G	ds	T			
UCW201-8 202-10 203-11 UCW201 202 203	1/2 5/8 11/16	12 15 17	40	26	15	1	10	16	4	10-32UHF M5×0.8	4	900	580	0.19 0.18 0.17 0.15 0.20 0.18
UC201-8 202-10 203-11 204-12 UC201 202 203 204	1/2 5/8 11/16 3/4	12 15 17 20	47	31	17	1	12.7	18.3	4.5	1/4-28 M6×0.75	3.7	1000	630	0.20 0.19 0.18 0.16 0.21 0.19 0.18 0.16
UC205-14 205-15 205-16 UC205	7/8 15/16 1	25	52	34.1	17	1.5	14.3	19.8	5	1/4-28 M6×0.75	3.9	1100	710	0.22 0.20 0.19 0.19
UC206-17 206-18 206-19 206-20 UC206	1-1/16 1-1/8 1-3/16 1-1/4	30	62	38.1	19	1.5	15.9	22.2	5	5/16-24 M8×1	5	1540	1020	0.36 0.34 0.32 0.31 0.31
UC207-20 207-21 207-22 207-23 UC207	1-1/4 1-5/16 1-3/8 1-7/16	35	72	42.9	20	2	17.5	25.4	6	5/16-24 M8×1	5.7	2030	1400	0.52 0.50 0.48 0.46 0.46
UC208-24 208-25 UC208	1-1/2 1-9/16	40	80	49.2	21	2	19.0	30.2	8	5/16-24 M8×1	6.2	2300	1600	0.68 0.64 0.63
UC209-26 209-27 209-28 UC209	1-5/8 1-11/16 1-3/4	45	85	49.2	22	2	19.0	30.2	8	5/16-24 M8×1	6.4	2560	1810	0.78 0.74 0.70 0.68
UC210-30 210-31 UC210	1-7/8 1-15/16	50	90	51.6	24	2	19.0	32.6	10	3/8-24 M10×1.25	6.5	2750	2020	0.85 0.80 0.78
UC211-32 211-34 211-35 UC211	2 2-1/8 2-3/16	55	100	55.6	25	2.5	22.2	33.4	10	3/8-24 M10×1.25	7	3400	2550	1.22 1.10 1.05 1.07
UC212-36 212-38 212-39 UC212	2-1/4 2-3/8 2-7/16	60	110	65.1	27	2.5	25.4	39.7	10	3/8-24 M10×1.25	7.6	4100	3150	1.65 1.49 1.42 1.52
UC213-40 UC213	2-1/2	65	120	65.1	28	2.5	25.4	39.7	10	3/8-24 M10×1.25	8.9	4480	3470	1.88 1.80
UC214-44 UC214	2-3/4	70	125	74.6	30	2.5	30.2	44.4	12	7/16-20 M12×1.5	8.9	4870	3810	2.07 2.06
UC215-47 215-48 UC215	2-15/16 3	75	130	77.8	32	2.5	33.3	44.5	12	7/16-20 M12×1.5	8.9	5200	4200	2.21 2.11 2.19
UC216-50 UC216	3-1/8	80	140	82.6	33	3	33.3	49.3	14	7/16-20 M12×1.5	9.6	5700	4550	2.90 2.82
UC217-52 UC217	3-1/4	85	150	85.7	35	3	34.1	51.6	14	7/16-20 M12×1.5	10	6600	5320	3.56 3.46
UC218-56 UC218	3-1/2	90	160	96.0	37	3	39.7	56.3	15	7/16-20 M12×1.5	11	7550	6170	4.62 4.53

JRZC® 金锐轴承 BALL BEARING INSERTS 外球面球轴承

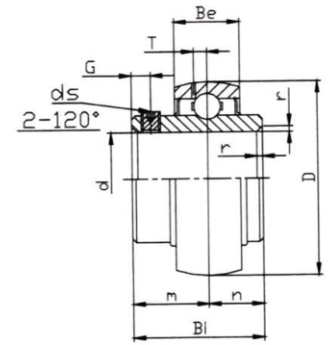

UC300 SERIES
UC300 系列

座轴承型号 Housing NO.	轴 径 Shaft Diad1		基本尺寸 Dime80nsion(mm)									额定动载荷 Basic Load Rating (kg)	额定静负荷 Basic Static Load Rating (kg)	座重量 Housing wt (kg)
	(in)	(mm)	D	Bi	Be	r	n	m	G	ds	T			
UC305-14 305-15 305-16 UC305	1/8 15/16 1	25	62	38	21	2	15	23	6	1/4-28 M6×0.75	6.1	1760	1160	0.39 0.37 0.35 0.35
UC306-18 306-19 UC306	1-1/8 1-3/16	30	72	43	23	2	17	26	6	1/4-28 M6×0.75	6.7	2119	1445	0.60 0.54 0.56
UC307-20 307-21 307-22 UC307	1-1/4 1-5/16 1-3/8	35	80	48	25	2.5	19	29	8	5/16-24 M8×1	7.4	2620	1830	0.81 0.79 0.75 0.75
UC308-24 308-25 UC308	1-1/2 1-9/16	40	90	52	27	2.5	19	33	10	3/8-24 M10×1.25	8.2	3200	2280	1.07 1 1
UC309-26 309-27 309-28 UC309	1-5/8 1-11/16 1-3/4	45	100	57	30	2.5	22	35	10	3/8-24 M10×1.25	9	4150	3060	1.39 1.33 1.28 1.26
UC310-30 310-31 UC310	1-7/8 1-15/16	50	110	61	32	3	22	39	12	7/16-20 M12×1.5	10	4850	3640	1.75 1.67 1.65
UC311-32 311-34 311-35 UC311	2 2-1/2 2-3/16	55	120	66	34	3	25	41	12	7/16-20 M12×1.5	10.7	5620	4280	2.3 2.2 2 2.1
UC312-36 312-38 312-39 UC312	2-1/4 2-3/8 2-7/16	60	130	71	36	3.5	26	45	12	7/16-20 M12×1.5	11.5	6420	4960	2.8 2.6 2.6 2.5
UC313-40 UC313	2-1/2	65	140	75	38	3.5	30	45	12	7/16-20 M12×1.5	12.2	7370	5780	3.46 3.32
UC314-44 UC314	2-3/4	70	150	78	40	3.5	33	45	12	7/16-20 M12×1.5	13	8170	6180	3.9 3.9
UC315-48 UC315	3	75	160	82	42	3.5	32	50	14	1/2-20 M14×1.5	13.8	8900	7310	4.33 4.18
UC316-50 UC316	3-1/8	80	170	86	44	3.5	34	52	14	1/2-20 M14×1.5	14.5	9650	8330	5.25
UC317-52 UC317	3-1/4	85	180	96	46	4	40	56	16	5/8-20 M16×1.5	15	10410	9130	7 6.7
UC318-56 UC318	3-1/2	90	190	96	48	4	40	56	16	5/8-20 M16×1.5	15.9	11300	10300	7.65 7.60
UC319-60 UC319	3-3/4	95	200	103	50	4	41	62	16	5/8-20 M16×1.5	16.7	12300	11600	8.75 8.75
UC320-64 UC320	4	100	215	108	54	4	42	66	18	3/4-16 M18×1.5	18	14300	12800	10.03 10.28
UC321		105	225	112	56	4	44	68	18	M18×1.5	19	18700	16300	12.3
UC322		110	240	117	60	4	46	71	18	M18×1.5	21	20900	18300	14.5
UC324		120	260	126	64	4	51	75	18	M18×1.5	22	21100	18400	18.7
UC326		130	280	135	68	5	54	81	20	M20×1.5	23	23400	20400	23.3
UC328		140	300	145	73	5	59	86	20	M20×1.5	25	26000	22700	28.9

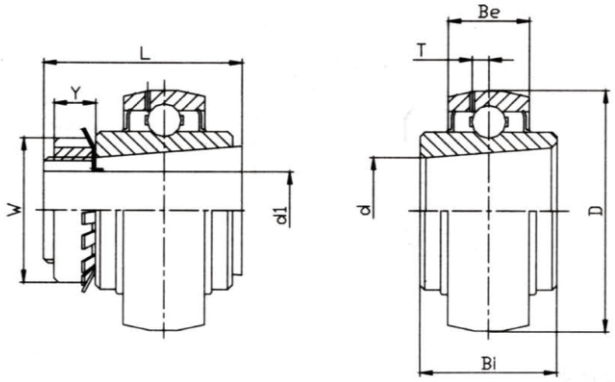

UK200+H SERIES
UK200+H 系列

座轴承型号 Housing NO.	轴 径 Shaft Diad1		基本尺寸 Dime80nsion(mm)								额定动载荷 Basic Load Rating (kg)	额定静负荷 Basic Static Load Rating (kg)	座重量 Housing wt (kg)
	(in)	(mm)	D	L	d	Bi	Be	T	Y	W			
UK205+HE2305 205+HA2305 UK205+H2305	3/4 13/16	20	52	35	25	23	17	4.5	8	38	1100	710	0.25 0.24 0.24
UK206+HE2306 206+HA2306 206+HA2306 UK206+H2306	7/8 15/16 1	25	62	38	30	26	19	5.1	8	45	1540	1020	0.42 0.41 0.37 0.4
UK207+HE2307 207+HA2307 UK207+H2307	1–1/8 1–3/16	30	72	43	35	27	20	5.8	9	52	2030	1400	0.57 0.55 0.55
UK208+HE2308 208+HA2308 208+HS2308 UK208+H2308	1–1/4 1–5/16 1–3/8	35	80	46	40	29	21	6.2	10	58	2300	1600	0.78 0.75 0.72 0.72
UK209+HA2309 209+HE2309 209+HS2309 UK209+H2309	1–7/16 1–1/2 1–5/8	40	85	50	45	30	22	6.5	11	65	2560	1810	0.89 0.84 0.77 0.8
UK210+HA2310 210+HE2310 UK210+H2310	1–11/16 1–3/4	45	90	55	50	31	23	6.5	12	70	2750	2020	0.98 0.95 0.93
UK211+HS2311 211+HA2311 211+HE2311 UK211+H2311	1–7/8 1–15/16 2	50	100	59	55	33	24	7.3	12	75	3400	2550	1.28 1.22 1.17 1.19
UK212+HA2312 212+HS2312 UK212+H2312	2–1/16 2–1/8	55	110	62	60	36	26	7.7	13	80	4100	3150	1.62 1.56 1.52
UK213+HA2313 213+HE2313 213+HS2313 UK213+H2313	2–3/16 2–1/4 2–3/8	60	120	65	65	38	27	8.3	14	85	4480	3470	2.1 2.04 1.89 1.91
UK215+HA2315 UK215+H2315	2–1/2	65	130	73	75	41	30	9.2	15	98	5200	4200	2.65 2.56
UK216+HE2316 UK216+H2316	2–3/4	70	140	78	80	44	32	9.6	17	105	5700	4550	3.24 3.23
UK217+HE2317 UK217+H2317	3	75	150	82	85	46	34	10.5	18	110	6600	5320	3.84 3.93
UK218+HS2318 UK218+H2318	3–1/8	80	160	86	90	49	36	11.1	18	120	7550	6170	4.8 4.75

JRZC® 金锐轴承 BALL BEARING INSERTS 外球面球轴承

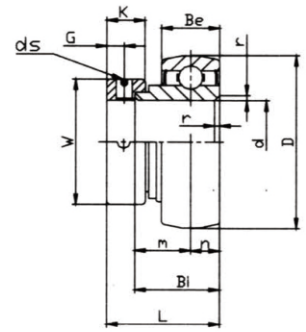

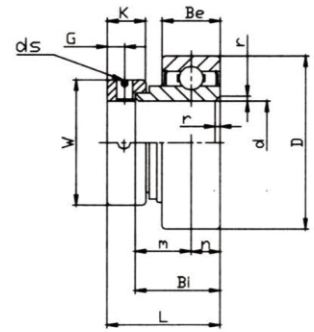

SA200 SERIES
SA200 系列

CSA200 SERIES
CSA200 系列

座轴承型号 Housing NO.		轴 径 Shaft Diad1		基本尺寸 Dime80nsion(mm)											额定动载荷 Basic Load Rating (kg)	额定静负荷 Basic Static Load Rating (kg)	座重量 Housing wt (kg)
		(in)	(mm)	Be	D	Bi	r	n	m	L	W	K	G	ds			
SA201–8 202–9 202–10 203–11 SA201 202 203	CSA201–8 202–9 202–10 203–11 CSA201 202 203	1/2 6/16 5/8 11/16	12 15 17	12	40	19.1	0.8	6	13.4	28.6	28.6	13.5	5	1/4–28 M6×0.75	780	454	0.14 0.13 0.12 0.11 0.10 0.09
SA204–12 SA204	CSA204–12 CSA204	3/4	20	14	47	21.5	1.5	7	14.5	31	33.3	13.5	5	1/4–28 M6×0.75	1010	630	0.15 0.16
SA205–14 205–15 205–16 SA205	CSA205–14 205–15 205–16 CSA205	7/8 15/16 1	25	15	52	21.5	1.5	7.5	14	31	38.1	13.5	5	1/4–28 M6×0.75	1100	710	0.21 0.19 0.18 0.18
SA206–17 206–18 206–19 206–20 SA206	CSA206–17 206–18 206–19 206–20 CSA206	1–1/16 1–1/8 1–3/16 1–1/4	30	16	62	23.8	1.5	8	15.8	35.7	44.5	15.9	6	5/16–24 M8×1	1550	1020	0.34 0.32 0.3 0.29 0.3
SA207–20 207–21 207–22 207–23 SA207	CSA207–20 207–21 207–22 207–23 CSA207	1–1/4 1–5/16 1–3/8 1–7/16	35	17	72	25.4	2	8.5	16.9	38.9	55.6	17.5	6.5	5/16–24 M8×1	2030	1400	0.55 0.53 0.5 0.47 0.5
SA208–24 208–25 SA208	CSA208–24 208–25 CSA208	1–1/2 1–9/16	40	18	80	30.2	2	9	21.2	43.7	60.3	18.3	6.5	5/16–24 M8×1	2300	1600	0.67 0.65 0.63
SA209–26 209–27 209–28 SA209	CSA209–26 209–27 209–28 CSA209	1–5/8 1–11/16 1–3/4	45	19	85	30.2	2	9.5	20.7	43.7	63.5	18.3	6.5	5/16–24 M8×1	2570	1810	0.74 0.72 0.67 0.66
SA210–29 210–30 210–31 210–32 SA210	CSA210–29 210–30 210–31 210–32 CSA210	1–3/16 1–7/8 1–15/16 2	50	20	90	30.2	2	10	20.2	43.7	69.9	18.3	6.5	5/16–24 M8×1	2760	2010	0.9 0.86 0.83 0.79 0.80
SA211–32 211–33 211–34 211–35 SA211	CSA211–32 211–33 211–34 211–35 CSA211	2 2–1/16 2–1/8 2–3/16	55	21	100	32.5	2.5	10.5	22	48.4	76.2	20.7	8	5/16–24 M8×1	3400	2550	0.95 0.91 0.86 0.81 0.77
SA212–36 212–39 SA212	CSA212–36 212–39 CSA212	2–1/4 2–7/16	60	22	110	37.1	2.5	11	26.1	53.1	84.2	22.3	8	3/8–24 M10×1.25	4100	3150	1 0.98 0.99

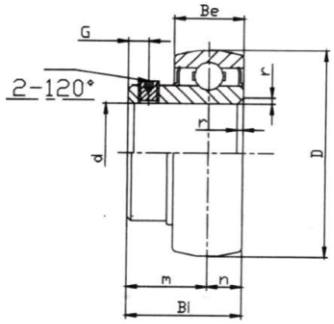

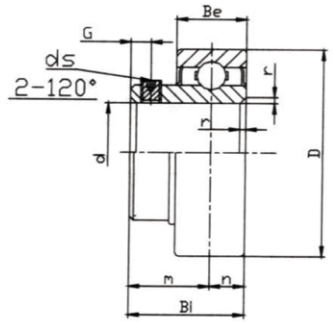

SB200 SERIES
SB200 系列

CSB200 SERIES
CSB200 系列

座轴承型号 Housing NO.		轴 径 Shaft Diad1 (in)	(mm)	基本尺寸 Dime80nsion(mm) Be	D	Bi	r	n	m	G	ds	额定动载荷 Basic Load Rating (kg)	额定静负荷 Basic Static Load Rating (kg)	座重量 Housing wt (kg)
SB201-8 202-9 202-10 203-11 SB201 202 203	CSB201-8 202-9 202-10 203-11 CSB201 202 203	1/2 6/16 5/8 11/16	12 15 17	12	40	22	1	6	16	4.5	10-32UHF M5×0.8	780	454	0.09 0.08 0.08 0.07 0.09 0.08 0.07
SB204-12 SB204	CSB204-12 CSB204	3/4	20	14	47	25	1.5	7	18	4.5	1/4-28 M6×0.75	1010	630	0.12
SB205-14 205-15 205-16 SB205	CSB205-14 205-15 205-16 CSB205	7/8 15/16 1	25	15	52	27	1.5	7.5	19.5	5	1/4-28 M6×0.75	1100	710	0.18 0.17 0.16 0.17
SB206-17 206-18 206-19 206-20 SB206	CSB206-17 206-18 206-19 206-20 CSB206	1-1/16 1-1/8 1-3/16 1-1/4	30	16	62	30	1.5	8	22	5.5	5/16-24 M8×1	1550	1020	0.28 0.26 0.25 0.23 0.25
SB207-20 207-21 207-22 207-23 SB207	CSB207-20 207-21 207-22 207-23 CSA207	1-1/4 1-5/16 1-3/8 1-7/16	35	17	72	32	2	8.5	23.5	6	5/16-24 M8×1	2030	1400	0.41 0.39 0.37 0.35 0.37
SB208-24 208-25 SB208	CSB208-24 208-25 CSB208	1-1/2 1-9/16	40	18	80	34	2	9	25	8	5/16-24 M8×1	2300	1600	0.48 0.45 0.45
SB209-26 209-27 209-28 SB209	CSB209-26 209-27 209-28 CSB209	1-5/8 1-11/16 1-3/4	45	119	85	41.2	2	10.2	31	8	5/16-24 M8×1	2570	1810	0.8
SB210-29 210-30 210-31 210-32 SB210	CSB210-29 210-30 210-31 210-32 CSB210	1-3/16 1-7/8 1-15/16 2	50	20	90	43.5	2	10.9	32.6	9	5/16-24 M8×1	2760	2010	0.87
SB211-32 211-33 211-34 211-35 SB211	CSB211-32 211-33 211-34 211-35 CSB211	2 2-1/16 2-1/8 2-3/16	55	21	100	45.3	2.5	11.8	33.5	10	5/16-24 M8×1	3400	2550	1.1
SB212-36 212-39 SB212	CSB212-36 212-39 CSB212	2-1/4 2-7/16	60	22	110	53.7	2.5	14.9	38.8	10	3/8-24 M10×1.25	4100	3150	1.3

我公司与部分国外公司带座外球面球轴承代号对照表

金锐轴承及轴承座代号	国外轴承公司相应代号 NTN	FYH	ASAHI	NBR	NSK	FAFNING	SKF	INA	PEER
UC200	UC200D1	UC200	Uc200	Uc200	Uc200		YAR200	GYE KRRB	Uc200
UC300	UC300D1	UC300	UC300		UC300			GNYE KRRB	
UEL200	UEL200D1	NA200	UC200	Hc200	EW200	G1100KRRB	YEL200	GE KERRB	GC200
UEL300	UEL300D1				EW200			GNE KRRB	
UK200	UK200D1	YJ200	UK200	Uk200	UK200		3620 (00)	GSH RRB	
UK300	UK300D1	UK300	UK300		UK300				
SA200	AEL200	SA200	KH200	SA200	EN200	RAE.. RRB		RAE NPPB	FH200
SB200	AS200	SB200	BO	SB	UB200	YAE.. RRB	YET200	AY NPPB	FHS200
SER200	UCS200D1	ER200	SER200	SER200		ER..		ER	SER200
P200	P200	P200	P200	P200	P200		SY	ASE	P200
P300	P300	P300	P300		P300			SAO	
F200	F200	F200	F200	F200	F200		FY	CJ	F200
F300	F300	F300	F300					CJO	
FL200	FL200	FL200	FL200	Fl200	Fl200		FYTB	CJT	FT200
FLU200	FLU200								
FL300	FL300	FL300	FL300						
T200	T200	T200	T200	T200	T200			TUE	T200
T300	T300	T300	T300					TUEO	
C200	C200	C200	C200	C200	C200		TU		C200
C300	C300	C300	C300						
FC200	FC200	FC200	FC200	Fc200	FC200				Fc200
FS300	FS300	FS300	FS300		FS300				
PH200	HP200	PH200	PH200		PH300				PH200
PA200	U0200	PA200	PA200	PA200	PA200		SYF	SHE	PA200
FA200	FA200	FA200	FA200		PA200			SFT	PA200
FB200	FH200	FB200	FK200	FP200	FK200				FB200
FA200	HB200	HA200	ECH200	SH200	EH200			HE	HA200
PF200	PH200	PF200	PF200	F-0	PF200		PF (00)	MSB	PF-OR
PFT200			PFT200				PFD (00)	MSTR	PFT-OZ
PFL200	PFL20	PFL200	PFL200	PL-0	PFL200		PFT (00)	MSTR	

带座外球面球轴承的代号构成:

例：C - UC P 20 5 / C3

- C：带座轴承两侧为铸造通盖
- UC：带顶丝外球面球轴承
- P：铸造立式座
- 20：尺寸系列是2 系列
- 5：内径尺寸为25mm
- C3：外球面轴承3组径向游隙

带座外球面球轴承的结构形式代号:

外球面球轴承结构型式

代号	带顶丝外球面轴承
UC	带偏心套外球面球轴承
UEL	圆锥孔外球面轴承
UK	一端平带顶丝外球面球轴承
SB/UE	一端平带偏心套外球面球轴承
UD	两端平外球面球轴承

轴承座结构型式代号

代号	轴承座结构型式
P	铸造立式座
PH	铸造高中心立式座
PA	铸造窄立式座
F	铸造方形座
FU	铸造高中心方形座
FS	铸造凸台方形座
FL	铸造菱形座
FLU	铸造高中心菱形座
FA	铸造可调菱形座
FC	铸造凸台圆形座
T	铸造滑块座
C	铸造环形座
FT	铸造三角形座
FA	铸造可调菱形座
FB	铸造悬挂式座
HA	铸造悬吊式座
pp	冲压立式座
PF	冲压圆形座
PFT	冲压三角形座
PFL	冲压菱形形座